HADIOS
DINING TABLE
ART NO. - 38994
SIZE -200X120X77 CM

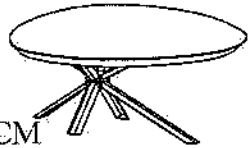

ASSEMBLY MANUAL

A-19pcs	B-19pcs	C-1pcs	D-4pcs	E-1pcs

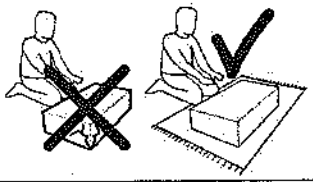

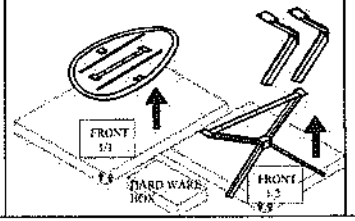

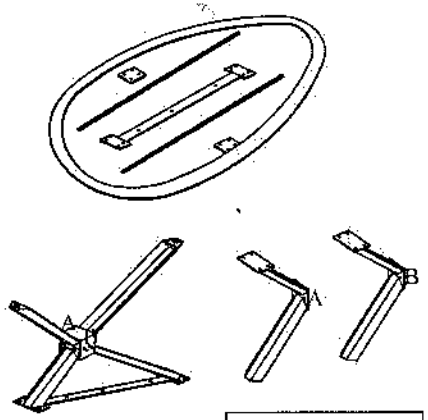

1

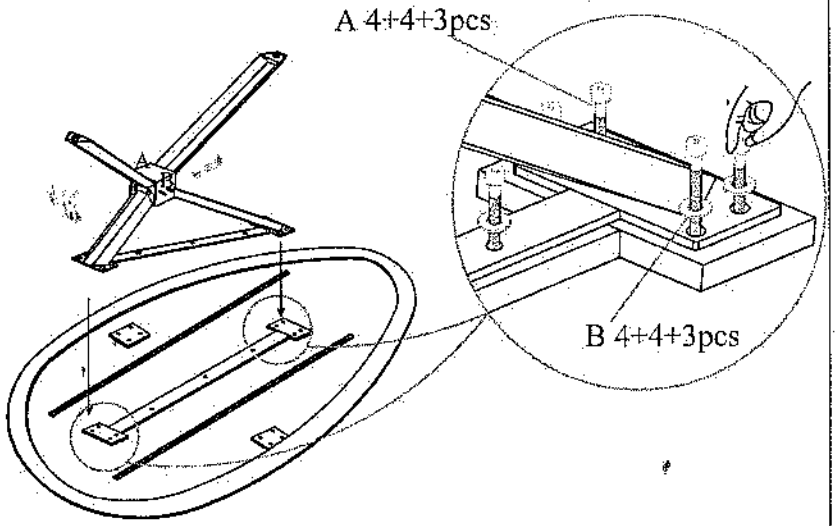

2

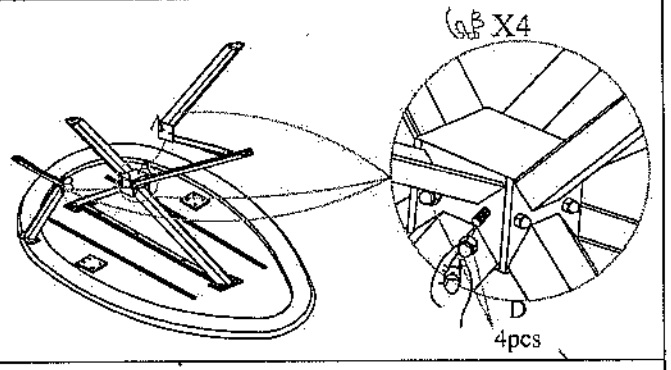

3

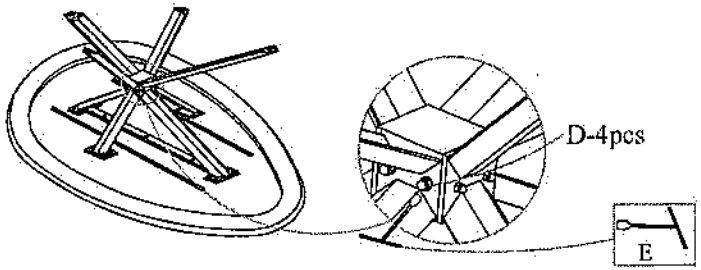
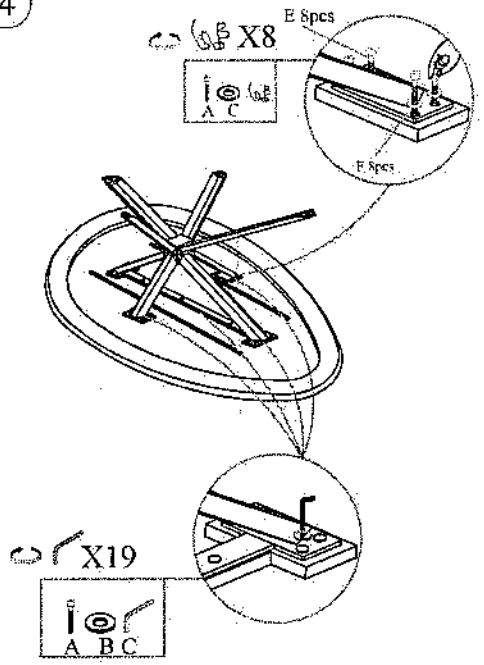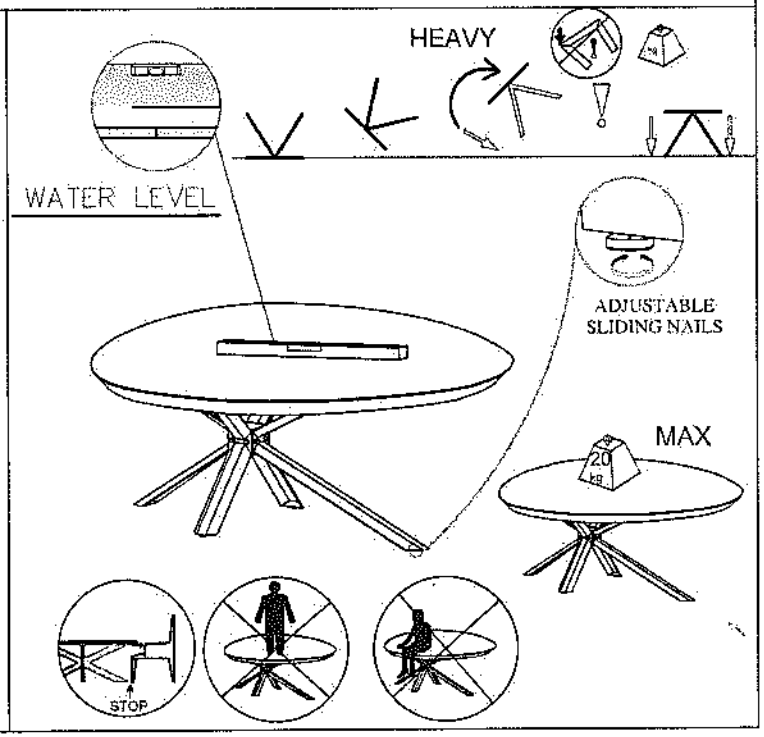
4