AVALON

H&H

CORNER TABLE

ART. NO. - 45747

SIZE : - 35X40X46CM

ASSEMBLY MANUAL

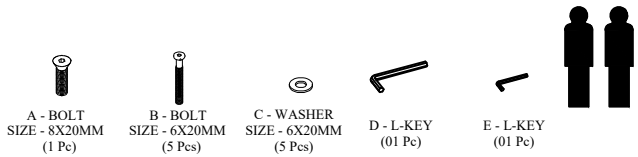

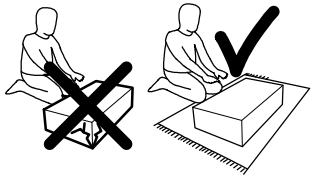

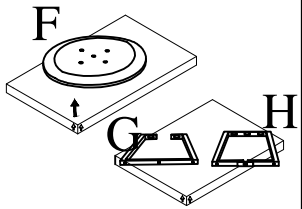

1

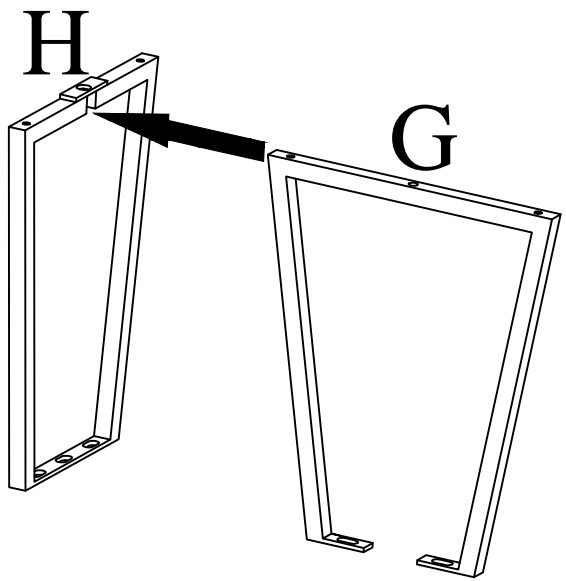

2

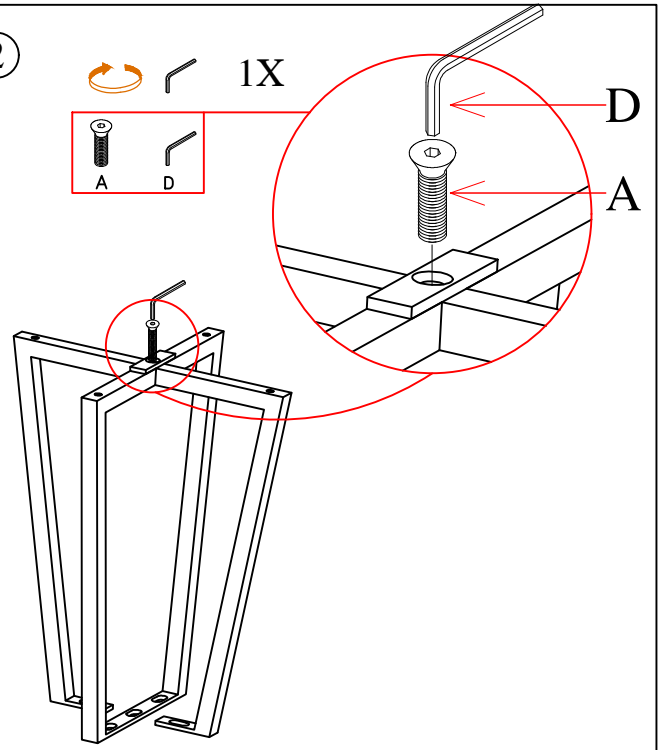

3

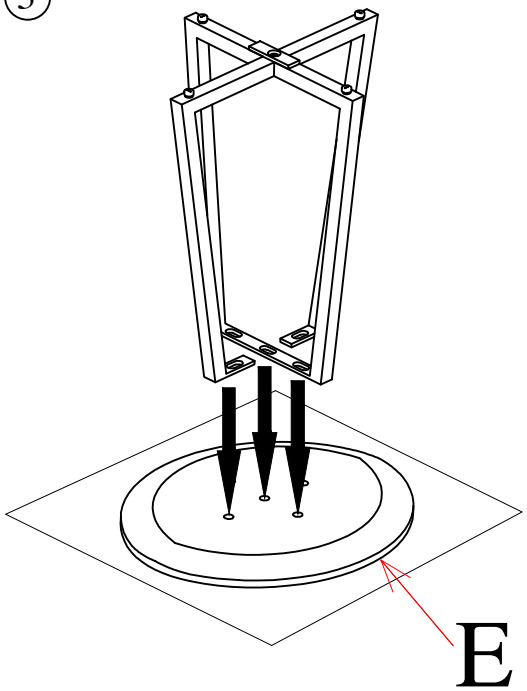

4

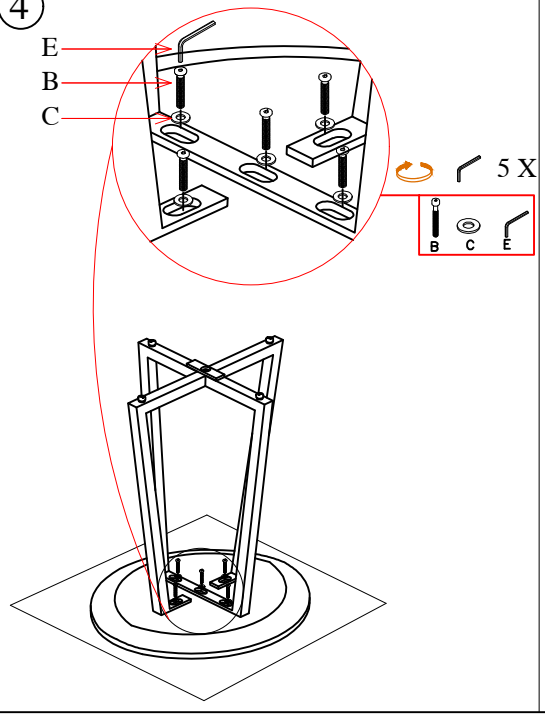
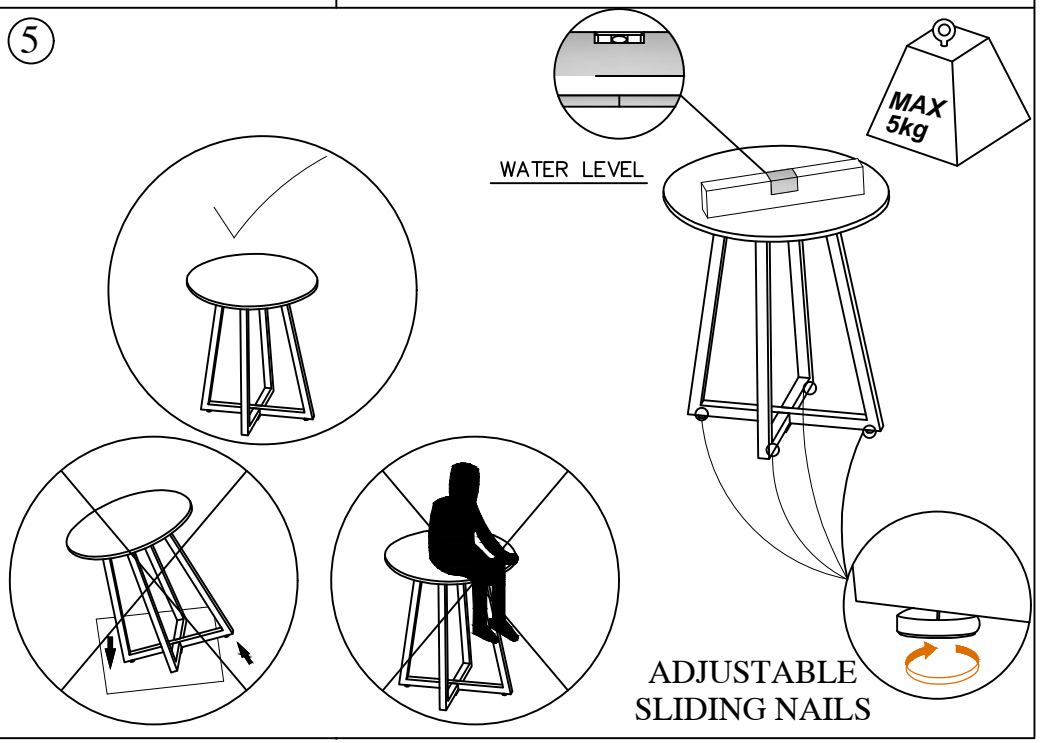
5