ASSEMBLING INSTRUCTION 5665

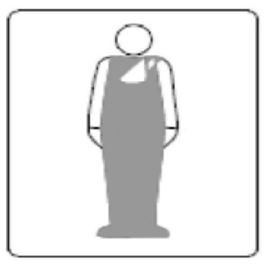

①

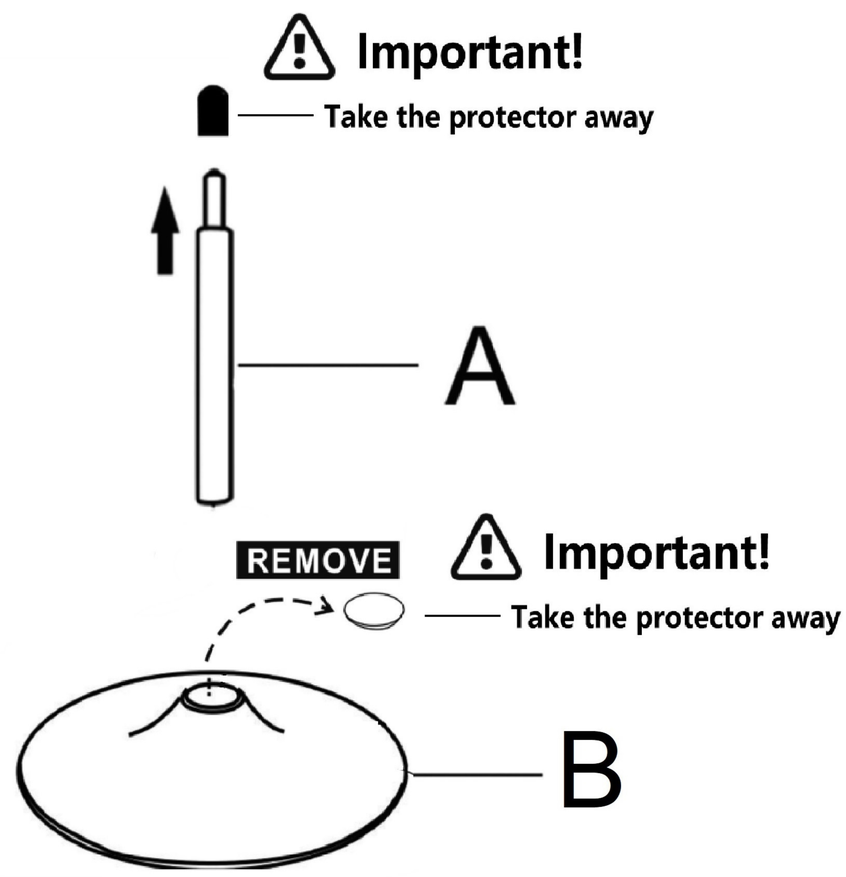

②

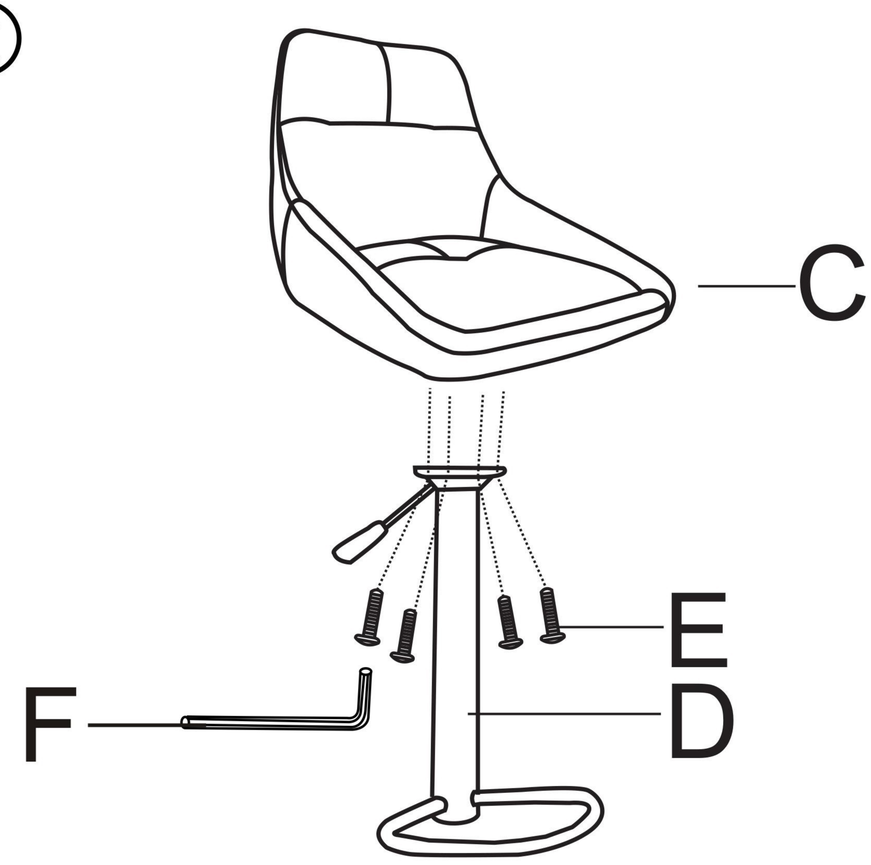

③

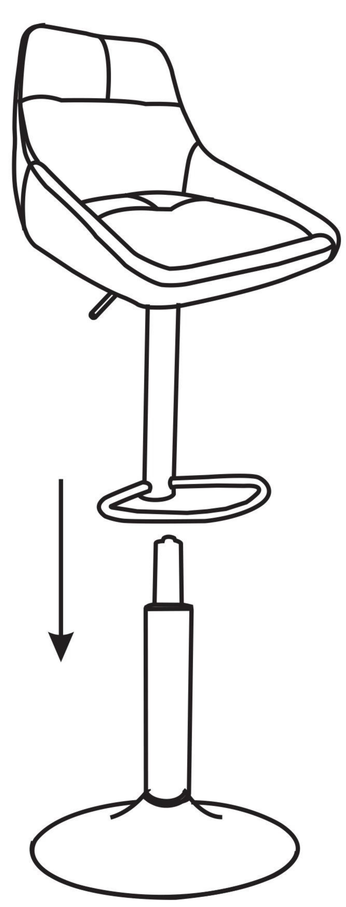

④