ASSEMBLING INSTRUCTIONS.

CAUTION:

THIS ITEM IS MADE OF LAMINATED PARTICLEBOARD AND MEDIUM DENSITY FIBREBOARD.
TO BE ASSEMBLED ON A DRY ,SOFT,SMOOTH AND CLEAN SURFACE. DO NOT USE DETERGENT OR CHEMICAL. AVOID DAMP AND DIRECT SUNLIGHT.

STEP 1	HARDWARE	6505-1
	WOOD DOWEL M8 X 25	20 PCS
	SCREW #9 X 1 1/2"	20 PCS
	METAL DOOR HINGES	6 SETS
	SCREW M3.5 X 14	24 PCS
	PLASTIC LEG STUD	4 PCS
	ADJUSTABLE SHELF STUD	8 PCS
	HANDLE	2 PCS
	PAN HEAD SCREW #6 X 22	4 PCS
	L SHAPE PLASTIC CORNER BLOCK	4 PCS
	SCREW M3 X 20	8 PCS
	STICKER	20 PCS

TOOLS REQUIRED :

	HAMMER		SCREW DRIVER

STEP 2

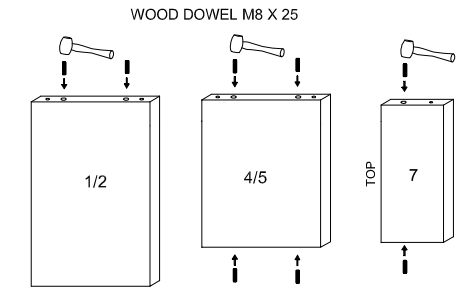

STEP 3

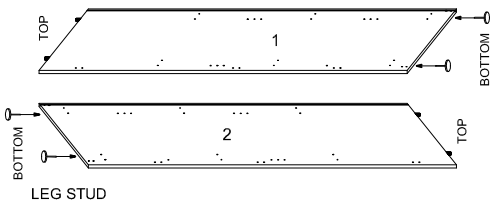

STEP 4

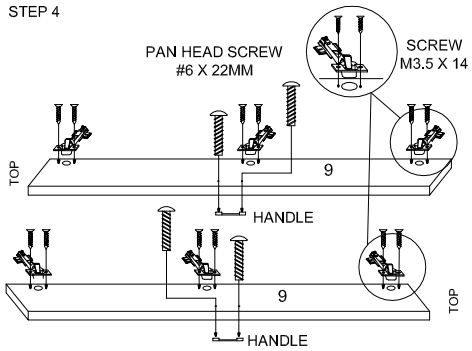

STEP 5

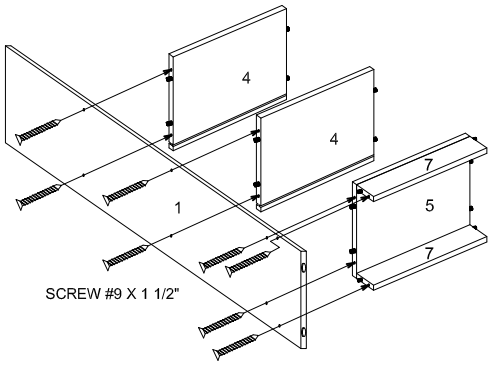

STEP 6

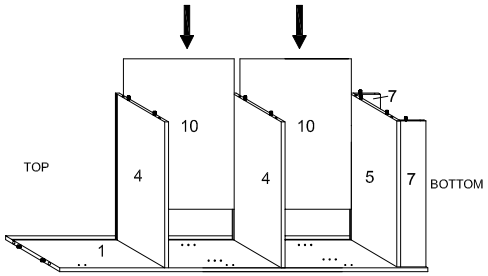

STEP 7

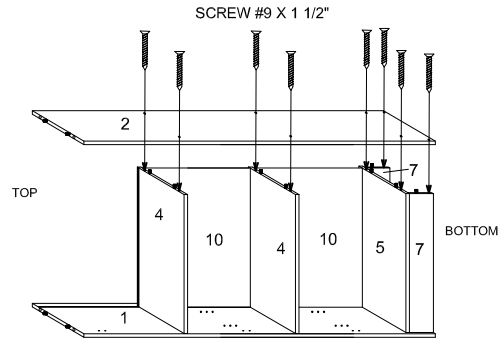

STEP 8

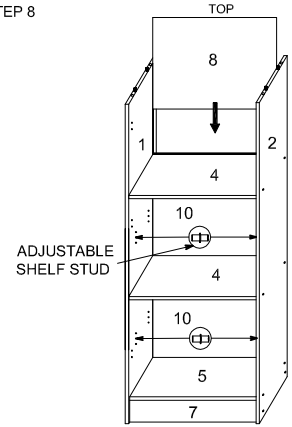

STEP 9

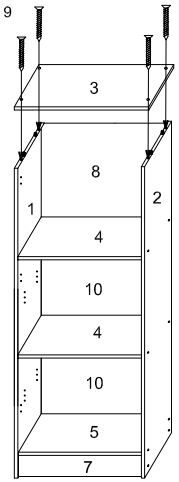

STEP 10

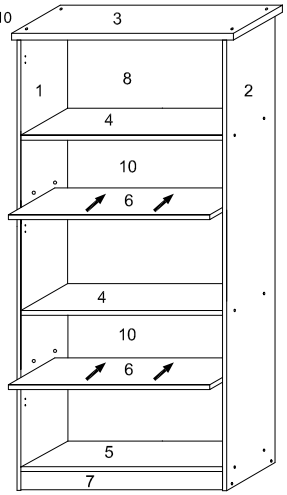

STEP 11

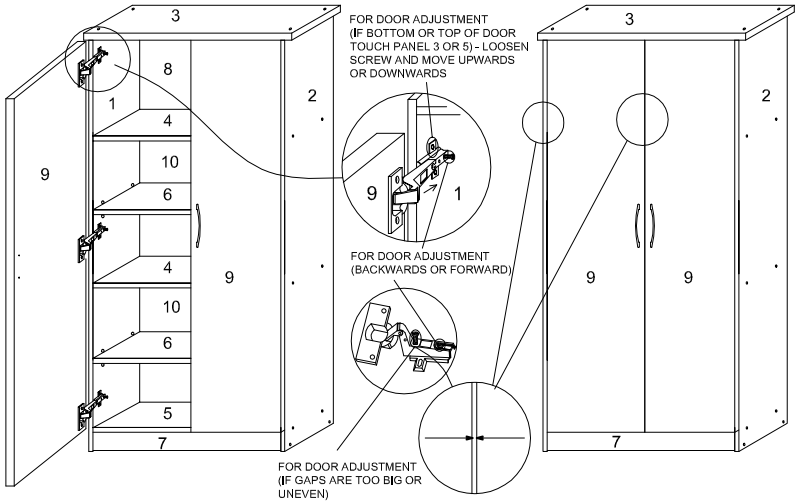
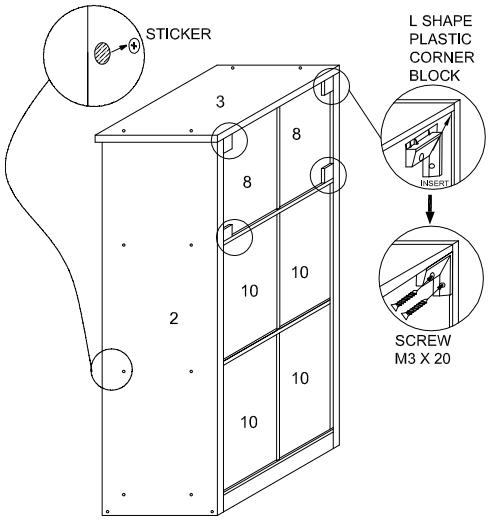
STEP 12